BÄRO
Retail
Lighting

Ontero EC 125

Article number: 21070105

LIGHT TECHNOLOGY

LED	COB
Light colour	GoldenBread
Luminous flux	4120 lm
System power	41 W
Luminaire Efficiency	100 lm/W
Reflector	OvalBasic
Beam angle	60° x 40°

LUMINAIRE

Rotation angle	350°
Swivel angle	210°
Weight	2.1 kg
Protection rating . class	IP 20 . I
Luminaire colour	stratoblack

OPCJA

RAL-colours, NCS-colours (powder coating or wet spraying) on inquiry, surface alloys on inquiry, honeycomb louver

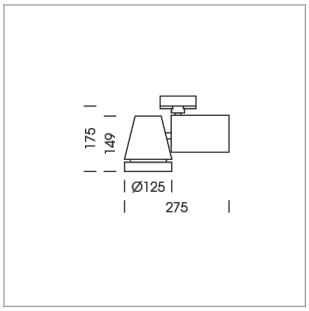

Surface-mounted luminaire with LED, rated life of the LED L80/B10 > 50000 h, chromaticity tolerance 3 SDCM (initial), reflector with oval light distribution pattern, reflector pure aluminium 99,99% in MIRO-Silver®, rotation angle 350°, swivel angle 210°, luminaire housing die-cast aluminium, powder-coated, stratoblack

Multiadapter black, inclusive driver unit: 220-240 V~ / 50-60 Hz, max. 24 luminaires per circuit (B16A fuse)
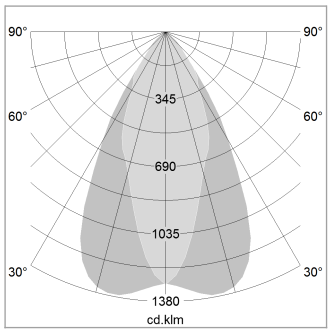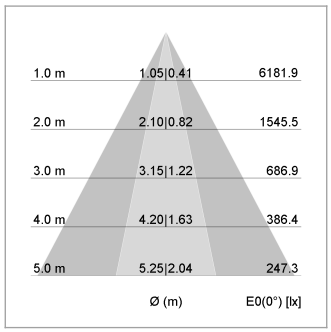
Note: All data are typical values. System features may change with product improvements due to technical advances. Errors excepted.