BÄRO
Retail
Lighting

Pendiro ID

Article number: 80660020

LIGHT TECHNOLOGY

LED	COB
Light colour	Fish-Seafood
Luminous flux	1090 lm
System power	15 W
Luminaire Efficiency	69 lm/W
Reflector	OvalBasic
Beam angle	40° x 60°

LUMINAIRE

Weight	0.7 kg
Protection rating . class	IP 20 . III
Luminaire colour	stratosilver

OPTIONEEL

RAL-colours, NCS colours (powder coating or wet spraying) on inquiry, surface alloys on inquiry

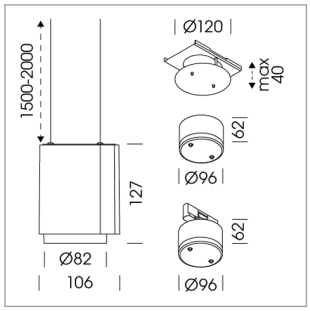

Suspended luminaire with LED, rated life of the LED L80/B10 > 50000 h, chromaticity tolerance 2 SDCM (initial), LED hybrid technology, 3D silicone lens to reduce the proportion of scattered light, reflector with oval light distribution pattern, reflector pure aluminium 99,99% in MIRO-Silver®, segmented, exchangeable reflector unit in high-sheen black plastic, with glass cover, luminaire housing die-cast aluminium, powder-coated, stratosilver

driver unit, Fix Current,
220-240 V / 50-60 Hz, camera-compatible, up to 2.5 KV interference resistance, SELV, max. 34 luminaires per circuit (B16A fuse)

driver unit, DALI,
220-240 V / 50-60 Hz, with GST18/5-pin connector, incl. 5-conductor feed-through wiring, camera-compatible, up to 2.5 KV interference resistance, SELV, max. 24 luminaires per circuit (B16A fuse)

76500059 canopy with multiadapter inclusive driver unit,
220-240 V / 50-60 Hz, 400 mA, up to 2.5 KV interference resistance, SELV, max. 95 pcs. / B16 luminaires per circuit (B16A fuse), cover sheet steel, powder-coated, stratoblack

76500060 canopy inclusive DALI driver unit,
220-240 V / 50-60 Hz, 400 mA, up to 2.5 KV interference resistance, SELV, max. 95 pcs. / B16 luminaires per circuit (B16A fuse), cover sheet steel, powder-coated, stratoblack
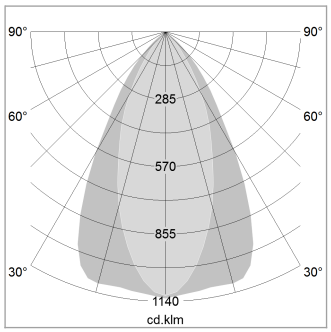
Note: All data are typical values. System features may change with product improvements due to technical advances. Errors excepted.