BÄRO
Retail
Lighting

Ontero XR

Article number: 20850118

LIGHT TECHNOLOGY

LED	COB
Light colour	927
Luminous flux	3380 lm
System power	41 W
Luminaire Efficiency	82 lm/W
Reflector	Flood
Beam angle	44°

LUMINAIRE

Rotation angle	400°
Swivel angle	+85°/ -85°
Weight	0.69 kg
Protection rating . class	IP 20 . I
Luminaire colour	stratosilver

OPTIONAL

RAL-colours, NCS-colours (powder coating or wet spraying) on inquiry (only luminaire head and holding arm) surface alloys on inquiry, blends

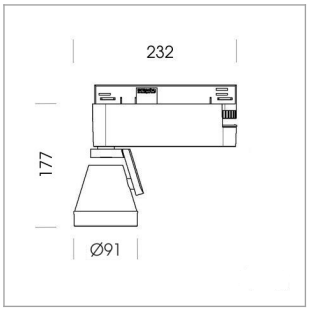

Surface-mounted luminaire with LED, rated life of the LED L80/B10 > 50000 h, colour rendering index CRI > 90, chromaticity tolerance 2 SDCM (initial), reflector with circular light distribution pattern, reflector pure aluminium 99,99% in MIRO-Silver®, segmented and faceted, rotation angle 400°, swivel angle +85°/-85°, luminaire head/retention arm die-cast aluminium, powder-coated, stratosilver, power-adapter, black, inclusive DALI driver unit: 220-240 V~ / 50-60 Hz, max. 95 luminaires per circuit (B16A fuse)
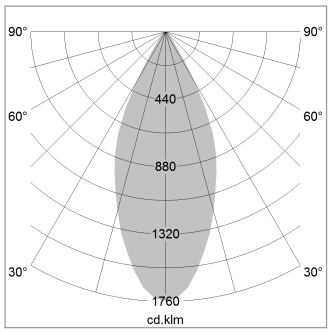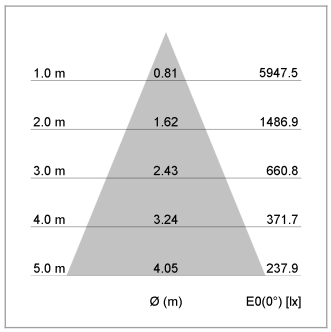
Note: All data are typical values. System features may change with product improvements due to technical advances. Errors excepted.