BÄRO
Retail
Lighting

Intara IC

Article number: 51530031

LIGHT TECHNOLOGY

LED	COB
Light colour	Fish-Seafood
Luminous flux	2440 lm
System power	41 W
Luminaire Efficiency	60 lm/W
Reflector	Medium
Beam angle	25°

LUMINAIRE

Rotation angle	330°
Swivel angle	+90° / -90°
Weight	1.2 kg
Protection rating . class	IP 20 . III
Luminaire colour	stratowhite

OPCJA

RAL-colours, NCS-colours (powder coating or wet spraying) on inquiry, surface alloys on inquiry, honeycomb louver

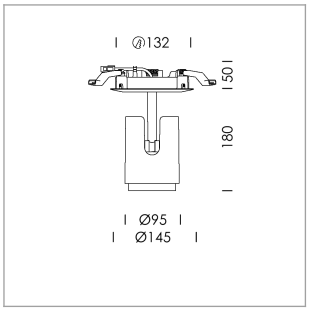

Semi-recessed luminaire with LED, rated life of the LED L80/B10 > 50000 h, chromaticity tolerance 2 SDCM (initial), LED hybrid technology, 3D silicone lens to reduce the proportion of scattered light, reflector with circular light distribution pattern, reflector pure aluminium 99,99% in MIRO-Silver®, segmented and faceted, exchangeable reflector unit in high-sheen black plastic, with glass cover, luminaire head die-cast aluminium, powder-coated, rotation angle 330°, swivel angle +90°/-90°, luminaire housing die-cast aluminium, powder-coated, stratowhite, separate driver unit

76500037 driver unit, Fix Current,
220-240 V / 50-60 Hz, 1050 mA, camera-compatible, up to 2.5 KV interference resistance, SELV, max. 22 luminaires per circuit (B16A fuse)

76500042 driver unit, DALI,
220-240 V / 50-60 Hz, 1050 mA, with GST18/5-pin connector, incl. 5-conductor feed-through wiring, camera-compatible, up to 2.5 KV interference resistance, SELV, max. 22 luminaires per circuit (B16A fuse)
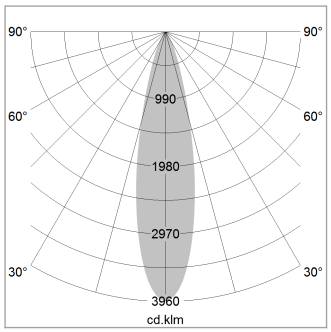
Note: All data are typical values. System features may change with product improvements due to technical advances. Errors excepted.