BÄRO
Retail
Lighting

Intara IC

Article number: 51560034

LIGHT TECHNOLOGY

LED	COB
Light colour	PearlWhite
Luminous flux	3240 lm
System power	34 W
Luminaire Efficiency	109 lm/W
Reflector	WallBeam

LUMINAIRE

Rotation angle	330°
Swivel angle	+90° / -90°
Weight	1.2 kg
Protection rating . class	IP 20 . III
Luminaire colour	stratowhite

OPTIONAL

RAL-colours, NCS-colours (powder coating or wet spraying) on inquiry, surface alloys on inquiry, honeycomb louver

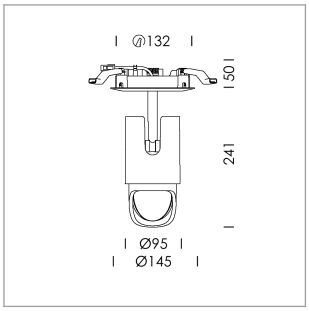

Semi-recessed luminaire with LED, rated life of the LED L80/B10 > 50000 h, colour rendering index CRI > 90, chromaticity tolerance 2 SDCM (initial), reflector with asymmetrical light distribution pattern, primary reflector and kick reflector 99% pure aluminium in MIRO-Silver®, attachment with kick reflector to the ceiling approach of the light cone, exchangeable reflector unit in high-sheen black plastic, with glass cover, luminaire head die-cast aluminium, powder-coated, rotation angle 330°, swivel angle +90°/-90°, luminaire housing die-cast aluminium, powder-coated, stratowhite, separate driver unit

76500076 driver unit, Fix Current,
220-240 V / 50-60 Hz, 850 mA, camera-compatible, up to 2.5 KV interference resistance, SELV, max. 34 luminaires per circuit (B16A fuse)

76500077 driver unit, DALI,
220-240 V / 50-60 Hz, 850 mA, with GST18/5-pin connector, incl. 5-conductor feed-through wiring, camera-compatible, up to 2.5 KV interference resistance, SELV, max. 24 luminaires per circuit (B16A fuse)
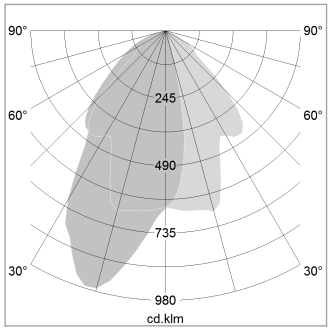
Note: All data are typical values. System features may change with product improvements due to technical advances. Errors excepted.