BÄRO
Retail
Lighting

Intara ID

Article number: 50600020

LIGHT TECHNOLOGY

LED	COB
Light colour	Fish-Seafood
Luminous flux	1540 lm
System power	23 W
Luminaire Efficiency	66 lm/W
Reflector	OvalBasic
Beam angle	60° x 40°

LUMINAIRE

Rotation angle	350°
Swivel angle	34°
Weight	1.2 kg
Protection rating . class	IP 20 . III
Luminaire colour	stratosilver

OPCJA

RAL-colours, NCS-colours (powder coating or wet spraying) on inquiry, surface alloys on inquiry, honeycomb louver

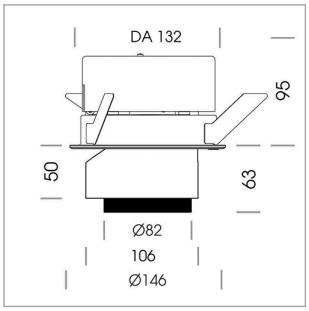

Recessed luminaire with LED, rated life of the LED L80/B10 > 50000 h, chromaticity tolerance 2 SDCM (initial), LED hybrid technology, 3D silicone lens to reduce the proportion of scattered light, reflector with oval light distribution pattern, reflector pure aluminium 99,99% in MIRO-Silver®, segmented, exchangeable reflector unit in high-sheen black plastic, with glass cover, fitting ring and cover sheet steel, rotation angle 350°, swivel angle 34°, patented swivel-tilt mechanism, luminaire housing die-cast aluminium, powder-coated, stratosilver, separate driver unit

76500034 driver unit, Fix Current,
220-240 V / 50-60 Hz, 600 mA, camera-compatible, up to 2.5 KV interference resistance, SELV, max. 34 luminaires per circuit (B16A fuse)

76500039 driver unit, DALI,
220-240 V / 50-60 Hz, 600 mA, with GST18/5-pin connector, incl. 5-conductor feed-through wiring, camera-compatible, up to 2.5 KV interference resistance, SELV, max. 24 luminaires per circuit (B16A fuse)
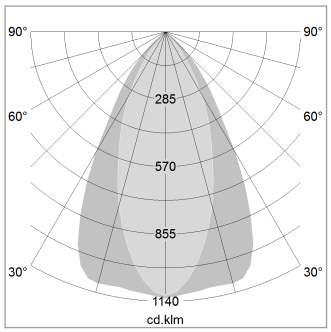
Note: All data are typical values. System features may change with product improvements due to technical advances. Errors excepted.