BÄRO
Retail
Lighting

Ontero IC

Article number: 21459074

LIGHT TECHNOLOGY

LED	COB
Light colour	Fish-Seafood
Luminous flux	2440 lm
System power	41 W
Luminaire Efficiency	60 lm/W
Reflector	Medium
Beam angle	24°

LUMINAIRE

Rotation angle	330°
Swivel angle	+90° / -90°
Weight	1.1 kg
Protection rating . class	IP 20 . II
Luminaire colour	special colour

OPCJA

RAL-colours, NCS-colours (powder coating or wet spraying) on inquiry, surface alloys on inquiry, OvalBeam lens or honeycomb louver, Casambi model on inquiry

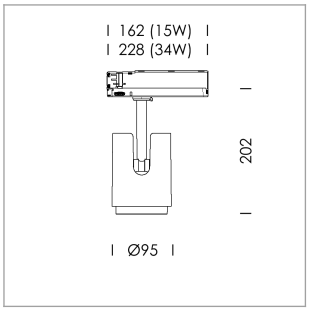

Surface-mounted luminaire with LED, rated life of the LED L80/B10 > 50000 h, chromaticity tolerance 2 SDCM (initial), LED hybrid technology, 3D silicone lens to reduce the proportion of scattered light, reflector with circular light distribution pattern, reflector pure aluminium 99,99% in MIRO-Silver®, segmented and faceted, exchangeable reflector unit in high-sheen black plastic, with glass cover, luminaire head die-cast aluminium, powder-coated, rotation angle 330°, swivel angle +90°/-90°, luminaire head/retention arm die-cast aluminium, special colour

Multiadapter black, inclusive driver unit: 220-240 V~ / 50-60 Hz, max. 64 luminaires per circuit (B16A fuse)

Note: All data are typical values. System features may change with product improvements due to technical advances. Errors excepted.